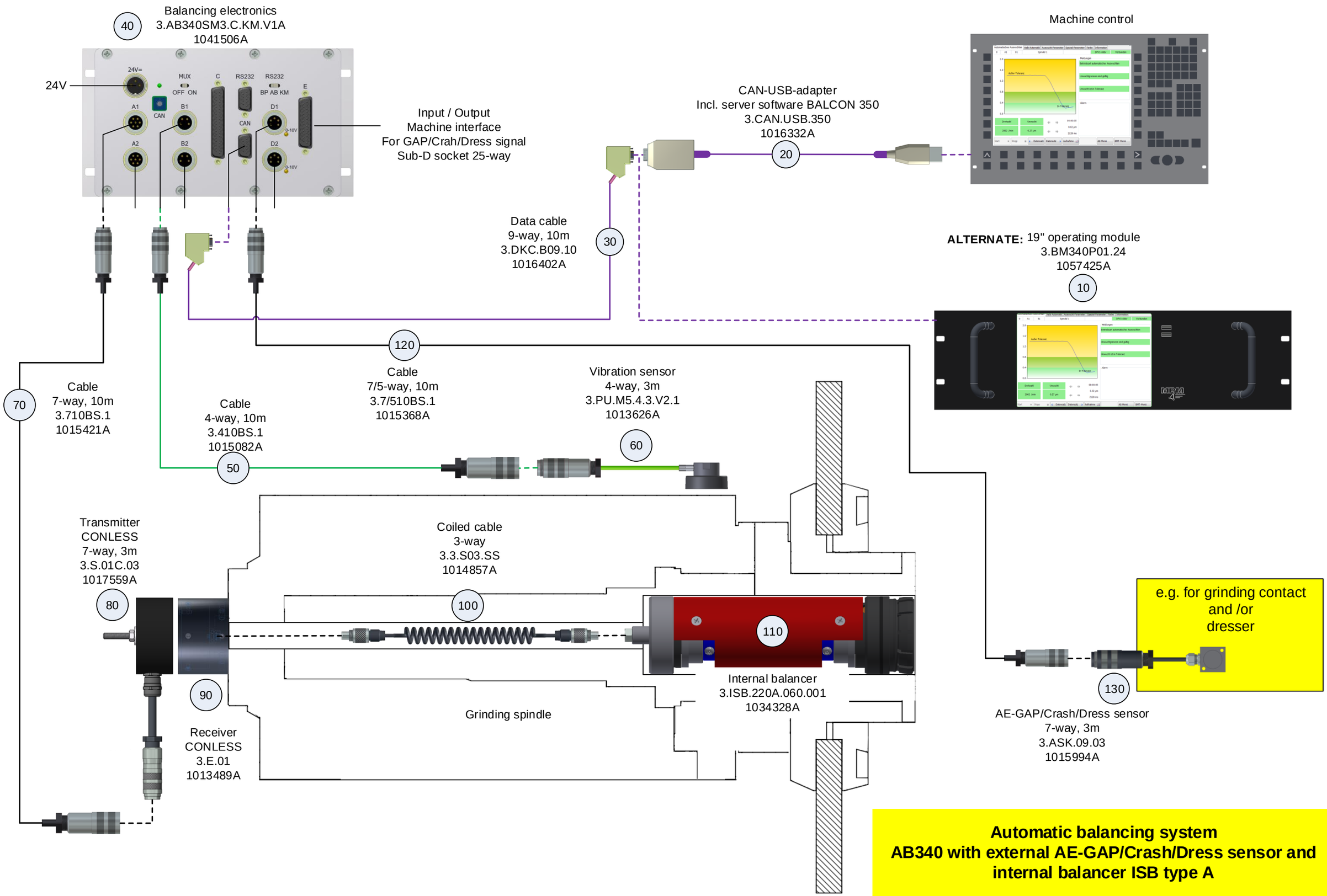

Automatic balancing system
AB340 with external AE-GAP/Crash/Dress sensor and internal balancer ISB type A